Strategies for Patent Claim Construction: Protecting Claims Post *Phillips v. AWH*

Hung H. Bui
Stein, McEwen & Bui LLP
1400 Eye Street, NW
Suite 300
Washington, DC 20005
(202) 216-9505
www.smbiplaw.com
hbui@smbiplaw.com

Presented:
Teleconference Program
Strafford Publications
January 9, 2007

Securing Innovation

Table of Contents

I. **Patent Claim Construction**
A. The Importance of Claim Construction
B. Canons of Claim Construction
C. Pre-*Phillips*:
1. *Vitronics v. Conceptronic, Inc.*, (Fed. Cir 1996)
2. *Texas Digital, Inc., v. Telegenix, Inc*. (Fed. Cir. 2002)
D. *Phillips v. AWH Corp*., (Fed. Cir. 2005)
1. Primary Source for Claim Term Interpretation
2. Roles of Dictionaries
(a) Technical v. General Dictionaries
(b) Single v. Multiple Dictionary Definitions
3. Single v. Multiple Embodiments
4. Claim Differentiation
5. Reading Limitations into Claim from the Specification
E. Impact of *Phillips*
1. Litigation
2. Opinion Drafting
3. Patent Prosecution
4. Corporate Patent Policies

Table of Contents

II. Problematic Terms (See Warren MacRae's Materials)

A. "Fuzzy" and Numerical Ranges
   1. About
   2. Approximately
   3. Substantially

B. Physical Relationship Terms
   1. Connected to
   2. Joined
   3. Secured
   4. Coupled
   5. Located Between
   6. Surround
   7. Permanently Affixed
   8. Adjacent
   9. Integral

C. Means Plus Function Terms

Table of Contents

III. Infringement Under Doctrine of Equivalents

A. Doctrine of Doctrine of Equivalents

B. Limitations of the Doctrine of Equivalents

1. The All-Element Rule
2. Prosecution History Estoppel
3. The Reverse Doctrine of Equivalents
4. The Hypothetical Claim Analysis

C. Impact of *Phillips*

IV. Claim Construction Post-Phillips (See Astrid R. Spain's Materials)

A. Broad Claim Construction

1. *Fiber Optic Designs v. Holiday Creations* (Fed. Cir. 2006)
2. *Kapusta v. Gale Corp*., (Fed. Cir. 2005)
3. *Free Motion Fitness v. Cybex Int'l* (Fed. Cir. 2005)

B. Narrow Claim Construction

1. *Old Town Canoe v. Confluence Holdings* (Fed. Cir. 2006)
2. *Ocean Innovations v. Jet Dock Sys.* (Fed. Cir. 2005)
3. *Nysrom v. Trex Co*., (Fed. Cir. 2005)
4. *Network Commerce v. Microsoft* (Fed. Cir. 2005)
5. *Aquatex Indus., v. Techniche Solutions* (Fed. Cir. 2005)

IV. Best Practices

I. Patent Claim Construction

A. The Importance of Claim Construction

- Central issue in every patentability, validity, and infringement analysis

B. Canons of Claim Construction

- Claims should be construed as of the time of the invention
- Claims should be construed to give limitations their "ordinary meaning" as understood by persons skilled in the art, unless the claim terms either have no generally accepted meaning in the art, or the intrinsic evidence (i.e., the specification or prosecution history) clearly shows that (1) the patentee acted as his own lexicographer to assign an uncustomary meaning or define a claim term narrowly; or (2) the patentee explicitly disavowed all or part of claim scope otherwise encompassed by the ordinary meaning of the claim term
- Claims should be construed to preserve their validity
- Limitations may **not** be read into the claims from the specification or prosecution history
- Doctrine of claim differentiation applies to presume that differences between claims are significant »» a broader claim cannot be construed to mean the same thing as a narrower claim

I. Patent Claim Construction

c. **Pre-*Phillips*:** There were two approaches used to identify the "ordinary meaning" of a claim term.

Traditional approach as suggested by Vitronics v. Conceptronic, Inc., 90 F.3d 1576 (Fed. Cir. 1996) emphasizes the use of intrinsic evidence (i.e., specification and prosecution history) as the primary source of identifying the "ordinary meaning" of a claim term. If ambiguity still exists, then extrinsic evidence, such as dictionary definitions and technical references as well as expert witness testimony may be considered. In application, the Vitronics approach tends to result in narrower claims closer to disclosed embodiments of the patent.

However, in practice, dictionaries have always been used to construe a claim term. In many instances, these dictionary definitions were used as intrinsic evidence. Finally, in Texas Digital, Inc., v. Telegenix, Inc., 308 F.3d 1193 (Fed. Cir. 2002), the Federal Circuit expressly elevated dictionaries to a primary source of identifying the "ordinary meaning" of a claim term." If dictionaries have multiple meanings for a claim term, or if ambiguity still exists, then intrinsic evidence may be considered. Only then can extrinsic evidence be considered. In application, the Texas Digital approach tends to result in broader claims farther from the disclosed embodiments of the patent.

I. Patent Claim Construction

D. Phillips v. AWH Corp., 75 USPQ2d 1321 (Fed. Cir. 2005)

- *En Banc* Decision issued on July 12, 2005
- Meaning of term "baffles" was in dispute
- Phillips (Patentee) argued the Texas Digital approach
  - The term "baffles" should be interpreted based on the general purpose dictionary definition without using the specification (very broad)
- AWH (Accused Infringer) argued the Vitronics approach
  - The term "baffles" should be interpreted based on the specification (adopted by the original panel of the Federal Circuit)
- Resolved the conflict between the traditional Vitronics approach and the Texas Digital approach used to identify the "ordinary meaning" of a claim term
  - However, the *En Banc* Court did not directly address the seven (7) questions raised by the Amicus briefs

Phillips v. AWH Corp. Revisit

- **Original Case**: U.S. Patent No. 4,677,798 relates to modular, steel-shell panels that can be welded together to form vandalism-resistant walls. The panels are useful in building prisons because they are load-bearing and impact-resistant, while insulating against fire and noise
- Claim recites "means disposed inside the shell for increasing its load bearing capacity comprising internal steel **baffles** extending inwardly from the steel shell walls"
- Meaning of term "baffles" is in dispute
- "Ordinary meaning" according to the **dictionary** of the term "baffles" is very broad - Something which deflects, checks or otherwise regulates flow
- **Intrinsic Evidence**
  - "Baffles" are used to deflect bullets, thus must have angles at other than 90^0 angle to deflect bullets
  - Other functions of "baffles" are also described, including: providing structural support for one of the walls, shown in FIG. 4 and FIG. 6; and providing for overlapping and interlocking … to produce substantially an intermediate barrier wall between the opposite [wall] faces, and thus, creating small compartments that can be filled with either sound/thermal insulation or rock/gravel to stop projectile, shown in FIG. 7
  - Dependent claims 2 and 17 further define that the "baffles" are disposed at "angles for deflecting projectiles such as bullets" that penetrate the outer shell
  - Dependent claim 6 further provides an additional requirement for the baffles as being interlocked "to form an intermediate barrier"

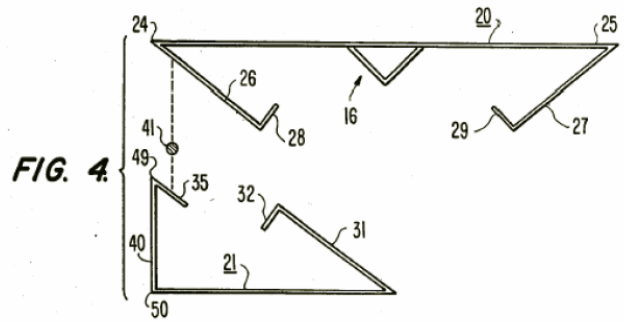

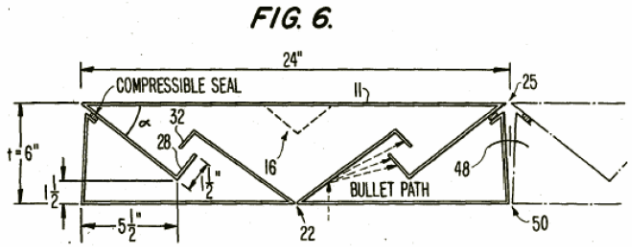

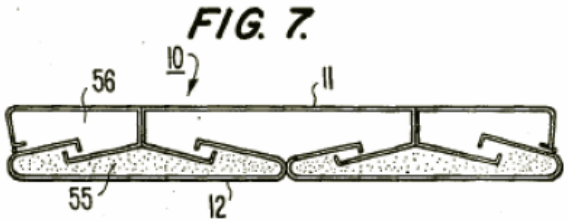

Questions Raised by Amicus Briefs To Be Answered by the Federal Circuit *En Banc*

1. Is the public notice function of patent claims better served by referencing primarily to technical and general purpose dictionaries and similar sources to interpret a claim term or by looking primarily to the patentee's use of the term in the specification? If both sources are to be consulted, in what order?
2. If dictionaries should serve as the primary source for claim interpretation, should the specification limit the full scope of claim language (as defined by the dictionaries) only when the patentee has acted as his own lexicographer or when the specification reflects a clear disclaimer of claim scope? If so, what language in the specification will satisfy those conditions? What use should be made of general as opposed to technical dictionaries? How does the concept of ordinary meaning apply if there are multiple dictionary definitions of the same term? If the dictionary provides multiple potentially applicable definitions for a term, is it appropriate to look to the specification to determine what definition or definitions should apply?
3. If the primary source for claim construction should be the specification, what use should be made of dictionaries? Should the range of the ordinary meaning of claim language be limited to the scope of the invention disclosed in the specification, for example, when only a single embodiment is disclosed and no other indications of breadth are disclosed?
4. Instead of viewing the claim construction methodologies in the majority and dissent of the now-vacated panel decision as alternative, conflicting approaches, should the two approaches be treated as complementary methodologies such that there is a dual restriction on claim scope, and a patentee must satisfy both limiting methodologies in order to establish the claim coverage it seeks?
5. When, if ever, should claim language be narrowly construed for the sole purpose of avoiding invalidity under, e.g., 35 U.S.C. §§ 102, 103 and 112?
6. What role should prosecution history and expert testimony by one of ordinary skill in the art play in determining the meaning of the disputed claim terms?
7. Consistent with the Supreme Court's decision in Markman v. Westview Instruments, Inc., 517 U.S. 370 (1996), and our en banc decision in Cybor Corp. v. FAS Technologies, Inc., 138 F.3d 1448 (Fed. Cir. 1998), is it appropriate for this court to accord any deference to any aspect of trial court claim construction rulings? If so, on what aspects, in what circumstances, and to what extent?

En Banc Decision

1. **PHILLIPS ON PRIMARY SOURCE OF CLAIM TERM INTERPRETATION**

Affirmed the Vitronics approach which emphasizes the importance of intrinsic evidence (i.e., specification and prosecution history) as the primary source for claim term interpretation, while rejecting the Texas Digital approach which emphasizes the use of dictionary definitions for claim term interpretation.

The specification (rather than a dictionary) is the single best guide to the meaning of a dispute term.

- Claims must be interpreted in light of the claims themselves, the *specification*, and the *prosecution history*, i.e., intrinsic evidence.
- Ordinary meaning of a claim term is its meaning to a person skilled in the art at the time of the invention, **after** reading the claim term both in the context of the particular claim and the context of the entire patent, including the *specification* and *prosecution history,* and **not** the ordinary meaning among laymen.

En Banc Decision

2. PHILLIPS ON EXTRINSIC EVIDENCE, INCLUDING ROLES OF DICTIONARIES

Extrinsic evidence, i.e., dictionaries, treaties, technical references, expert and inventor testimony, may **only** be used to better understand the underlying technology of the invention, and what words might mean to persons skilled in the art. Dictionaries may even be consulted when construing claims, so long as the dictionary definition does **not** contradict any meaning ascertained from the specification.

Extrinsic evidence is viewed in general as less reliable than the specification and its prosecution history for several reasons:

1) Extrinsic evidence by definition is **not** part of the patent and does **not** have the specification's virtue of being created at the time of patent prosecution for the purpose of explaining the patent's scope and meaning;

2) Extrinsic publication may **not** be written by or for skilled artisans and therefore may **not** reflect the understanding of a skilled artisan in the art

3) Extrinsic evidence consisting of expert reports and testimony is generated at the time of and for the purposes of litigation and thus can suffer from bias that is not present in intrinsic evidence

4) There is a virtually unbounded universe of potential extrinsic evidence. For example: Different dictionaries may contain different sets of definitions for the same words. Each party will naturally choose the pieces of extrinsic evidence most favorable to its cause, leaving the court with the considerable task of filtering the useful extrinsic evidence from the fluff

5) Undue reliance on extrinsic evidence can undermine the **public notice function** of patents

En Banc Decision

2. **PHILLIPS ON EXTRINSIC EVIDENCE, INCLUDING ROLES OF DICTIONARIES**

However, the appropriate use of dictionaries in claim construction should **not** be precluded. Specifically, in circumstances where the specification fails to provide clarity as to the ordinary meaning of a claim term, dictionaries may still be consulted when construing claims.

(a) TECHNICAL V. GENERAL DICTIONARIES

In noting that extrinsic evidence such as dictionaries may be useful in claim construction, the Federal Circuit especially looked favorably upon technical dictionaries as being helpful to a court "to better understand the underlying technology" and the way in which one of skill in the art might use the claim term. As a result, technical dictionaries are generally better than general dictionaries; however, these technical dictionaries still **cannot** contradict any meaning ascertained from the specification.

En Banc Decision

2. PHILLIPS ON EXTRINSIC EVIDENCE, INCLUDING ROLES OF DICTIONARIES

(b) SINGLE V. MULTIPLE DICTIONARY DEFINITIONS

Previously, in *Texas Digital*, the Federal Circuit has recognized that a claim limitation may be construed to cover multiple dictionary definitions, as long as these definitions do **not** conflict with intrinsic evidence.

In *Phillips*, the En Banc Court has now stated that these dictionary definitions can **only** be used for better understand the underlying technology of the invention, and what words might mean to persons skilled in the art, and **cannot** be used for claim term interpretation. As a result, the distinctions between single and multiple dictionary definitions become less significant

En Banc Decision

3. **PHILLIPS ON SINGLE V. MULTIPLE EMBODIMENTS**

The Court in *Phillips* has reaffirmed that claims will **not** be confined to the specific embodiments of the invention described in the specification.

In addition, the Court has expressly rejected the contention that where a patent specification describes **only** a single embodiment, the claims must be construed as being limited to that embodiment. This is interesting, particularly in view of Gentry Gallery, Inc., v. Berkline Corporation, 45 U.S.P.Q.2d 1498, where the Federal Circuit invalidated claims that are too broad for the specification, for failing to meet written description requirement under 35 USC ¶112, 1st paragraph, even though claims read literally on the embodiment disclosed in the specification and drawings.

Moreover, the Court has noted that where specification sets forth multiple objectives and multiple functions served by the invention, the claims should **not** be construed as limited to only those structures that can achieve all of those objectives. Accordingly, multiple embodiments and multiple objectives in the specification may prevent undue limitation of the claims. Furthermore, specific embodiments in the specification should be indicated as only example to ensure that limitations from the specification are **not** read into the claims.

En Banc Decision

4. PHILLIPS ON CLAIM DIFFERENTIATION

- Reaffirmed the vitality of the doctrine of claim differentiation
- Claim term usage in other claims, both asserted and unasserted, can be instructive as to term meaning
- The presence of a dependent claim that adds a particular limitation gives rise to a presumption that the limitation in question is **not** present in the independent claim. In other words, dependent claims can be used to broaden the scope of independent claims

En Banc Decision

5. **PHILLIPS ON READING LIMITATIONS INTO CLAIM FROM THE SPECIFICATION**

Unfortunately, *Phillips* provided **no** guidance to resolve the more difficult question of how to read a claim in view of the specification without reading limitations into the claim. In other word, if a claim term is to be defined in view of the specification, isn't that definition imported into the claim for claim construction purposes?

In Kapusta v. Gale Corp., 05-1091 (Fed. Cir. 2005), the Court noted that, while a specification should be used to interpret the meaning of a claim, it should not be used to import **unnecessary** limitations into the claims. But what are the difference between necessary and unnecessary limitations?

In short, as Judge Mayer accurately noted in dissent of *Phillips*, the land of claim construction after *Phillips* is **no** different than before: "**[W]e say nothing new, but merely restates what has become the practice over the last ten years** – that **we will decide cases according to whatever mode or method results in the outcome we decide, or at least allows us a seemingly plausible way out of the case**."

E. IMPACT OF PHILLIPS

- **LITIGATION:**
  - Spectrum of claim construction possibilities should be much more limited, with a narrower range of possible meanings
  - Harder to argue for broad claim construction, unless such broad definitions are provided in the specification
  - Harder to stretch claims based on disclosed embodiments to cover future developments, unless those future embodiments are disclosed in the specification
  - Harder to challenge validity if broad claim construction is not given
  - Reduce the use of dictionaries as the primary source of claim construction; however, if intrinsic evidence fails to provide clarity as to the ordinary meaning of a claim term, dictionaries may still be permissible

E. IMPACT OF PHILLIPS

- **OPINION DRAFTING:**
  - Easier to render an opinion regarding infringement or validity that can withstand scrutiny, since claims must be interpreted in light of the claims themselves, the *specification*, and the *prosecution history* (i.e., intrinsic evidence) and their "ordinary meanings" must be understood by a person skilled in in the art at the time of the invention, after reading the claim term both in the context of the particular claim and the context of the entire patent, including the *specification* and *prosecution history*
  - Less likely to use dictionaries, treaties and technical references for possible claim term interpretation, since these items can only be used for an understanding of commonly used words or the underlying technology, and cannot contradict intrinsic evidence; however, in certain circumstances where the specification fails to provide clarity as to the ordinary meaning of a claim term, dictionaries may still be permissible

E. IMPACT OF PHILLIPS

- **PATENT PROSECUTION:**
  - Reinforce the importance of drafting both the specification and claims carefully to ensure that broad interpretations are possible

    Specification:
    - Avoid disclaimer of claim scope, or admission and characterization that may limit claim construction
    - Disclose multiple embodiments and multiple functions of the invention to support a broad claim scope
      - Single embodiment specifications reduce claim scope
    - Define terms broadly; provide broad dictionary definitions for claim terms where appropriate; and utilize lexicography if necessary

E. IMPACT OF PHILLIPS

- **PATENT PROSECUTION:**

  Claims:

  - Choose words or terms that have broadest meaning
    - Use words or terms (in Plain English) that are easily understood by a lay person (including Federal Judges) without making reference to the specification
  - Add depending claims
    - Use claim differentiation to broaden the scope of independent claims

- **CORPORATION PATENT POLICIES:**
  - Less of an impact since many companies today already have guidelines to address claim construction issues

II. Problematic Terms

In Phillips, the Federal Circuit noted that there is **no** magic formula for conducting claim construction and a court is **not** barred from considering any particular sources or required to analyze sources in any specific sequence, as long as those sources are **not** used to contradict claim meaning that is unambiguous in light of the intrinsic evidence.

Primary sources used to construe the meaning of claims: the claims, the specification, and prosecution history. However, for problematic terms, all sources, including intrinsic evidence and extrinsic evidence, may be considered for claim construction without any specific sequence.

II. Problematic Terms (cont.)

A. "Fuzzy" and Numeric Ranges

1. About

- Definite term: "…temperature range from 370 C° to about 1300 C°.."—*Zoltek Corp. v. United States*, 57 USPQ.2d 1257 (2000).
- When read in light of specification, sufficiently clear to apprise person skilled in the art of scope of invention
- Dependent on facts of case, nature of invention and knowledge imparted by totality of earlier disclosure to those skilled in the art—*Eiselstein v. Frank*, 52 F.3d 1035 (Fed. Cir. 1995).
- Flexible; similar to "nearly" and "approximately"
- Relatively broad interpretation of any range modified

II. Problematic Terms (cont.)

2. At Least Approximately
   - *Quantum Corp. v. Rodime, PLC*, 65 F.3d 1577 (Fed. Cir. 1995) cert. denied, 517 U.S. 1167 (1996)—hard drive storage density issue
     - Claim changed from "at least 600 tracks/inch" →"at least approximately 600 tracks/inch"
   - "At least" = "as the minimum"; coupled with specific number, means absolute lower limit of range
   - Addition of "approximately" eliminated the precise lower limit of range and impermissibly expanded scope of claim
     - "at least approximately 600 tracks/inch" defined as open-ended range starting slightly below 600

II. Problematic Terms (cont.)

3. Substantially
   - Broad, but definite; can mean “significantly”, “considerably”, “largely”, or “essentially”
   - Capable of multiple interpretations; intrinsic evidence including specification, to be reviewed for appropriate interpretation—*Deering Precision Instruments, L.L.C. v. Vector Distribution Systems, Inc.,* 347 F.3d 1314 (Fed. Cir. 2003).
     - Balance-type scale with sliding weight in its zero position “disposed substantially in an imaginary plane containing the fulcrum”
     - Ordinary dictionary meaning connotes term of approximation AND magnitude

II. Problematic Terms (cont.)

B. Physical Relationship Terms

1. Connected to
   - Directly—*Ethicon Endo-Surgery, Inc. v. United States Surgical Corp.*, 93 F.3d 1572 (Fed. Cir. 1996)—combined surgical cutting instrument/stapler to prevent stapler firing when empty
     - "lockout mechanism connected to said longitudinal slots…" means directly connected to slots **without** intervening elements
     - Ethicon argued for broad interpretation: "connected to" should include distant elements connected by intervening elements
     - Court looked at relative locations of lockout mechanism and slots to narrowly interpret term within claim context
   - Indirectly—Ullstrand v. Coons, 147 F.2d 698 (C.C.P.A. 1945)
     - Court reads multiple dictionary definitions to indicate "connect" is limited to neither "direct" nor "indirect" connection

II. Problematic Terms (cont.)

2. Joined
   - Need not be direct; can have intervening elements
     - *Genentech, Inc. v. Chiron Corp.*, 112 F.3d 495 (Fed. Cir. 1997)—additional nucleotides could be inserted between two joined elements
     - Joined ordinarily means "connected"
3. Secured
   - Does NOT require direct connection
     - *Foster v. Hallco Mfg. Co.*, Civ.App. 96-1399 (Fed. Cir. July 14, 1997)(unpublished).
     - End portions of drive unit connected to end portions of conveyor frames, connected to end portions of channel members—indirect connection only requires secure fastening of end portions to each other

II. Problematic Terms (cont.)

4. Coupled
   - Generically describes a connection
   - Does not require, nor limited to either physical or mechanical coupling
   - *Johnson Worldwide Assocs., Inc. v. Zebco Corp.*, 175 F.3d 985 (Fed. Cir. 1999).

II. Problematic Terms (cont.)

5. Located between
   - Wholly or partially
     - *Zelinski v. Brunswick Corp.*, 185 F.3d 1311 (Fed. Cir. 1999)
     - "…located between the center of the spherical mass and the first elongate section…"
     - Broadly interpreted to mean wholly or partially between two objects
6. Surround
   - "…bracket opening means…surround the handle…"—*Libman Co. v. Quickie Mfg Corp.*, Civ.App. 03-1064 (Fed. Cir. Aug. 27, 2003) (unpublished).
     - Push broom handle with threaded end for brush attachment; bracket to prevent loosening of handle

II. Problematic Terms (cont.)

- Quickie argues for only one dictionary definition
  - "surround" = encircled on all or **nearly all** sides
- Federal Circuit uses dictionary definitions supported by claim context and disclosure
  - "surround" = **completely** surround

7. Permanently affixed
   - In-line skate with "…shoe portion being permanently affixed to said base portion…"—*K-2 Corp. v. Salomon S.A.*, 191 F.3d 1356 (Fed. Cir. 1999)
     - K-2 asserts this includes removable screw in heel area
     - Federal Circuit rejects this; applies ordinary/accustomed meaning of "permanently"—requires fastening to be un-removable

II. Problematic Terms (cont.)

8. Adjacent
   - "Near", not separate or independent—*Electro Med. Sys., S.A. v. Cooper Life Sci., Inc.*, 34 F.3d 1048 (Fed. Cir. 1994).
     - "…means for delivering a stream of liquid adjacent said point of use…"; Court views specifications and prosecution histories
   - Not a term of art
     - *Winbond Electronics Corp. v. International Trade Comm'n*, Civ.App. No. 01-1031, 2001 WL 80412 (Fed. Cir. Jan. 30, 2001)(unpublished).
       - Ordinary and accustomed meaning = "close to", "next to", "lying near", "adjoining", rather than "not overlapping"

II. Problematic Terms (cont.)

9. Integral/one-piece
   - *In re Miskinyar*, 6 F.3d 787 (Table) (C.A.Fed. 1993) (unpublished).
     - Claims given broadest reasonable interpretation consistent with drawings
     - Claim 1 recites "…a one-piece piston driver having a centrally positioned, integral boss bearing directly against said piston and an integral circular flange with a downwardly dependent, integral cylindrical skirt…"
     - Drawings indicated "one-piece" means single unit of material and EXCLUDES separate but joined elements
       - Depicts elements of piston driver as homogeneous unit, illustrated by cross-hatching within boundaries of drawing of piston driver, without any break lines, indicating no joined pieces in the material of which it is composed
     - Broadest reasonable interpretation of "integral" includes components which "may be separate initially but are later joined to form a complete device."

II. Problematic Terms (cont.)

C. "Means Plus Function" Terms under 35 USC §112, 6th paragraph

Test: Whether a single means in the accused device or process is identical or structural equivalent to the means disclosed in the patent specification to perform the identical function of the claim element. See Lockheed Martin Corp. v. Space Sys./Loral, Inc., 324 F.3d 1308

The function must be identical; otherwise, there is no equivalence under §112, ¶6 element. As a result of such a strict application of §112, ¶6 equivalence, "means plus function" claims have been traditionally discouraged in favor of claims using a more generic language to perform an intended function. However, in view of significant restrictions imposed by Festo regarding the doctrine of equivalents (DOE), "means plus function" language can be effectively used to define the disclosed invention to maximize patent protection for patents

III. Infringement Under Doctrine of Equivalents

A. **Doctrine of Equivalents (DOE):** An equitable doctrine created by Federal Courts to protect a patentee "against efforts of copyists to evade liability for infringement by making only insubstantial changes to a patented invention".

Traditional Test of Equivalence: Whether the accused product performs substantially the same function, in substantially the same way, to obtain substantially the same result as the claimed invention. This is known as the "**function-way-result" test**, as set forth by Supreme Court in Graver Tank & Mfg. Co. v. Linde Air Prods. Co., 339 U.S. 605, 85 USPQ 328 (1950)

Current Test of Equivalence: Whether the differences between the accused product and the claimed invention are "**insubstantial**" as stated by the Supreme Court in Hilton Davis Chemical Co. v. Warner-Jenkinson Co., 520 U.S. 17, 41 U.S.P.Q.2d 1865 (1997)

III. Infringement Under Doctrine of Equivalents

However, in determining whether there are **insubstantial differences** between the accused product and the claimed invention, the court may consider the **"function-way-result" test**, i.e., whether the accused product performs substantially the same function, in substantially the same way, to obtain substantially the same results as the claimed invention. In addition, there are other factors which tend to indicate whether the differences between the accused product and the claimed invention are substantial or insubstantial, including:

- Proof of **known interchangeability** between elements (which tends to show differences to be insubstantial)
- Proof of **copying** (which tends to show differences to be insubstantial)
- Proof of **designing around** the patent claims (which tends to show differences to be substantial)

Other factors can also be used to determine "substantial" differences, including proof of: (1) Dramatic result, (2) More reliability, (3) Better Safety, (4) Cost less to produce, and (5) Simpler design that satisfies a need in the market.

III. Infringement Under Doctrine of Equivalents

B. Limitations on the Doctrine of Equivalents

1. **The All-Element Rule**: The U.S. Supreme Court acknowledged the "all-elements" rule in Hilton Davis Chemical Co. v. Warner-Jenkinson Co., 520 U.S. at 29, 41 U.S.P.Q.2d at 1871, as follows:

   "Each element contained in a patent claim is deemed material to defining the scope of the patented invention, and thus the doctrine of equivalents must be applied to individual elements of the claim, **not** to the invention as a whole. It is important to ensure that that the application of the doctrine [of equivalents], even as to an individual element, is **not** allowed such broad play as to effectively eliminate that element in its entirety"

   Consequently, there is **no** doctrine of equivalents infringement where a claim element is totally missing from an accused product. Sage Products v. Devon Indus., 126 F.3d 1420, 44 U.S.P.Q.2d 1103 (Fed. Cir. 1997); Phonometrics, Inc. v. Northern Telecom Inc., 133 F.3d 1459, 45 U.S.P.Q.2d 1421 (Fed. Cir. 1998)

III. Infringement Under Doctrine of Equivalents

B. Limitations on the Doctrine of Equivalents

2. **Prosecution History Estoppel:** Precludes a patent holder from asserting the doctrine of equivalents to cover subject matter surrendered during prosecution of the patent application. Festo Corp. v. Shoketsu Kinzoku Kogyo Kabushiki Co.

- An amendment that narrows the scope of a claim for any reason related to the statutory requirements for a patent would give rise to prosecution history estoppel with respect to the amended claimed element.
- A presumption exists that prosecution history estoppel bars all equivalents; however, the patentee may rebut the presumption if:

(1) Equivalent may have been "unforeseeable" at the time of the patent application;
(2) Narrowing amendment bears no more than a "tangential relationship" to the equivalent; **or**
(3) One could not "reasonably be expected" to have drafted a claim that would have literally encompassed the alleged equivalent

As a result, a rebuttable presumption of prosecution history estoppel is created when there is a narrowing amendment made to satisfy a statutory requirement for patentability, for example, under 35 U.S.C. §101 (statutory subject matter and utility), §102 (anticipation), §103 (obviousness), §112-1st paragraph (lack of written description, enablement, and best mode), §112-2nd paragraph (lack of definiteness), §112-4th paragraph (claim differentiation and claim dependencies), §112-5th paragraph (improper multiple dependent claims)

III. Infringement Under Doctrine of Equivalents

Dedication: In Johnson & Johnson Assocs. Inc. v. R.E. Serv. Co., 285 F.3d 1046 (Fed. Cir. 2002), the Federal Circuit held that the subject matter disclosed but not claimed would be deemed dedicated to the public, and that the patent holder would be estopped from invoking the doctrine of equivalents (DOE) to recapture such dedicated subject matter

Foreseeable Alternatives: In Sage Products v. Devon Indus., 126 F.3d 1420, 1428 (Fed. Cir. 1997), the Federal Circuit made clear that claim limitations cannot be expanded under the Doctrine of Equivalents to cover foreseeable equivalents. Therefore, under Sage Products, a patent holder can capture newly developed, unforeseeable technologies as equivalents under the doctrine of equivalents (DOE), but **not** foreseeable ones, which the patent prosecutor must exhaust in the course of preparing the specification

III. Infringement Under Doctrine of Equivalents

3. **The Reverse Doctrine of Equivalents**: A defense against literal infringement where the accused product is "so far changed in principle from a patented article that it performs the same or a similar function in a substantially different way, but nevertheless falls within the literal words of the claim." Under these rare circumstances, the reverse doctrine of equivalents may be used to restrict the claim and defeat the patentee's action for infringement. However, there must be showing that: (1) there must be apparent literal infringement of the words of the claims; and (2) the accused product must be sufficiently different from that which is patented such that, notwithstanding the apparent literal infringement, the claims are interpreted to negate a finding of infringement.

In cases where the reverse doctrine of equivalents has been successfully asserted as a defense to charges of infringement, the courts have weighed the following factors in the balance:

1) Whether the accused product results from independent research;
2) Whether interchangeability of elements or means of the accused product was known;
3) Differing function or use of the accused product;
4) Same result but accomplished by significantly different means;
5) Significant improvement embodying inventive insight: not included in patent; and
6) Patent teaches away from the concept embodied in the accused product.

III. Infringement Under Doctrine of Equivalents

4. The Hypothetical Claim Analysis: Even if equivalence under the doctrine of equivalents is established, there can still be no infringement if the asserted scope of equivalency of what is literally claimed would encompass the prior art. Wilson Sporting Goods Co. v. David Geoffrey & Assoc., 904 F.2d 677, 14 U.S.P.Q.2d 1942 (Fed. Cir. 1990). "A patentee should not be able to obtain, under the doctrine of equivalents, coverage which he could not lawfully have obtained from the USPTO by literal claim."

- In Wilson Sporting Goods, the court set forth a test for determining the permissible range of equivalents which can exist for any claim. First, to visual a hypothetical patent claim just sufficient in scope to literally cover the accused product, and, then, to determine if that claim would have been patentable. If not, then it would be improper to permit the patentee to obtain that coverage in an infringement suit under the doctrine of equivalents. If the hypothetical claim could have been allowed, the prior art is not a bar in infringement under the doctrine of equivalents.

III. Infringement Under Doctrine of Equivalents

C. Impact of *Phillips*

1. Will infringement claims still be brought under the doctrine of equivalents (DOE)?

Yes, there should be more claims brought under the doctrine of equivalents to recapture features/elements that are excluded by a narrow claim construction, that would have otherwise been included in a broad claim construction

2. Can doctrine of equivalents (DOE) recapture features/elements that are excluded by a narrow claim construction, that would have otherwise been included in a broad claim construction?

Yes, the differences may be “insubstantial”; however, intentional disclaimer or disavowal, and prosecution history estoppel may still bar the equivalence

IV. Claim Construction Post-PHILLIPS

- **Phillips V. AWH Corp.**
  - Words of a claim are generally given their ordinary and customary meaning
  - The meaning that the term would have to a person of ordinary skill in the art
- Dictionary definitions indicate ordinary meaning
  - General reference dictionaries
  - Industry specific dictionaries
- New terms or terms used in a non-standard way are defined in the written description
- But…
  - When are limitations of the specification read into a claim, particularly, when claim terms are interpreted by the specification?
  - When is a claim construed broadly rather than narrowly?
  - Which dictionary definition is used by the court?

Broad v. Narrow Claim Construction

A. Broad Claim Construction
   - Fiber Optic Designs, Inc. v. Seasonal Specialties, LLC, 05-1488 (Fed. Cir. 2006)
   - Kapusta v. Gale Corp, 05-1091 (Fed. Cir. 2005)
   - Free Motion Fitness Inc. v. Cybex International Inc., 76 USPQ2d 1432 (Fed. Cir. 2005)

B. Narrow Claim Construction
   - Old Town Canoe Co. v. Confluence Holdings Corp., 78 USPQ2d 1705 (Fed. Cir. 2006)
   - Ocean Innovations Inc. v. Archer, 04-1528 (Fed. Cir. 2005)
   - Nystrom v. Trex Co., 76 USPQ2s 1481 (Fed. Cir. 2005)
   - Network Commerce Inc. v. Microsoft Corp., 76 USPQ2d 1330 (Fed. Cir. 2005)
   - AquaTex Industries Inc. v. Techniche Solutions, 76 USPQ2d 1213 (Fed. Cir. 2005)

V. BEST PRACTICES

- Claims and Specification need to be more thoroughly reviewed to ensure that broad interpretations are possible
- Avoid legal jargon, disclaimer or limiting wordings in description of the embodiments such as “preferred”
- Accounting for *Phillips* Method
  - Ensure Specification Is Broad
  - Remove discussions of prior art to extent possible
  - Reduce objects of invention
    - Used as intrinsic evidence of outer scope of invention
    - Avoid statements like “the invention is” and replace with “an aspect of the invention is” to show broader scope
    - Avoid using “must,” “necessary,” imperative,” and “required” as in “for the invention, it is necessary to have X.”
  - Include as many example embodiments as possible
    - Single embodiment specifications reduce claim scope
    - Include many examples of items within broad claim term
  - Include language that other embodiments possible

V. BEST PRACTICES

- Vocabulary -> know what the words of the claims mean by using a comprehensive dictionary
  - Use general dictionaries that the Court uses, such as Webster's 3rd International
  - Use technical and Industry specific dictionaries
- Try to use terms that are not only known to those of ordinary skill of the art, but those that laymen and judges can understand
- Avoid creating new terms or using terms that do not have an ordinary meaning.
  - If new terms are used, be clear the terms have a non-standard meaning and <u>what that meaning is</u>
- Use standard patent-law terms
  - comprising/consisting, first/second, etc.
  - Terms have very specific and established meanings in patent claims
- Use non-specific terms, not ambiguous terms
  - The precise meaning of "airline food" is non-specific, but certainly not ambiguous.

V. BEST PRACTICES

- **Cannot** rely on doctrine of equivalents (DOE)
- Disclose all foreseeable alternatives or modifications of the invention or elements of the invention
- Describe how invention might be implemented differently as the technology advances
- Consider using "means-plus-function" claims, particularly in view of significant restrictions imposed by Festo and Johnson & Johnson
- Define terms accurately but broadly – be your own lexicographer if necessary
  - Broad claim term should be entitled to broad claim construction, no special definition is given to a claim term that differs from its ordinary meaning, or no intentional disclaimer, or disavowal, of claim scope
- Add depending claims
  - Use theory of claim differentiation to broaden independent claim

  Note: Subject matter disclosed but **not** claimed in a patent application will be dedicated to the public, see Johnson v. Johnson & Sage Products